LED emergency driver

YH28,YH28A

Product description

- Suit for 8W to 200W lamp with external led driver,
- Used with LiFePO4 battery.
- 15-50VDC, 50-180V output.
- LED emergency converter that can transfer standard LED fitting into emergency LED fitting.
- Accessary test switch and charge indicator.

Applications

- UL Listed for dry/damp locations.
- For use on a wide range of LED fittings to convert them from standard to emergency fitting.
- Additional Relay that can control standard LED driver.
- Deep discharge protection.
- Ambient range ta 10....60℃.
- IP20 protection.
- Not intended for use in luminaries for high-risk task area lighting.

LFP LED 24 5 IP20 90min LVLE 100-347

c UL us LISTED E483815

Dimensions

L240×W45×H30 mm
L9.45′× W 1.77′× H1.18′

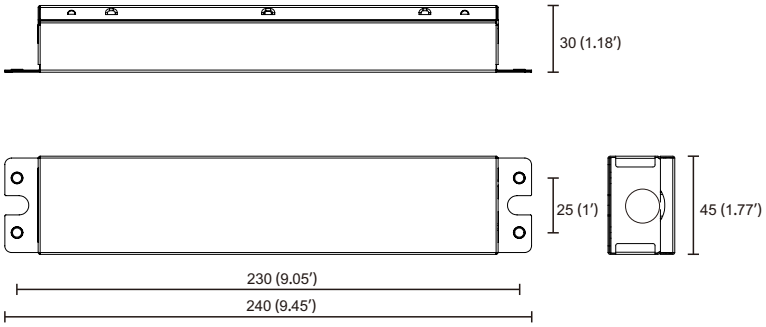

Ordering data

Model No.:	Input voltage	Output voltage/power (Emegency mode)	Battery pack	Duration (E.M mode)
YH28-08WL-50	100-347Vac 50-60Hz	15-50V 8W, LVLE	LiFePO4 6.4V,3.2Ah,20.48Wh	90minutes
YH28-08WL-180	100-347Vac 50-60Hz	50-180V 8W	LiFePO4 6.4V,3.2Ah,20.48Wh	90minutes
YH28A-08WL-50	100-277Vac 50-60Hz	15-50V 8W,LVLE	LiFePO4 6.4V,3.2Ah,20.48Wh	90minutes
YH28A-08WL-180	100-277Vac 50-60Hz	50-180V 8W	LiFePO4 6.4V,3.2Ah,20.48Wh	90minutes

YH28 series will be produced and delivered with a 300mm(11.8′) metal flex pipe.
The length of the metal flex pipe could be customized with extra cost if needed.

LED emergency driver
YH28,YH28A

Technical data

Item	Data
Rated input voltage	100-347V,100-277VAC,50/60Hz
Input current	20-100mA
Input power	8W
Power factor	0.6 @100VAC, 0.5@347VAC
Output wire L-out N-out (LED load input)	AC 6A Max
Output voltage range	DC15-50V, 55V max; DC50-180V,220V max
Output voltage(emergency mode)	8W
Battery pack voltage/capacity	LiFePO4 6.4 3200mAh, 21.48Wh
Recharge current	0-200mA
Recharge time	24hours
Discharge time	90 minutes
Max. casing temperature tc	70℃
Ambient operating temperature ta	10-60℃
Service life	50000 hours
RFI/EMI	FCC

Protections:

- Input over current protection.
- Output over voltage protection.
- Output under current protection.
- Output short circtit protecton.

Test switch

- Emergency conversion Kit will go into emergency mode if test switch is pressed when main supply is on, while it will go into charging mode if test switch is not pressed.
  In emergency mode, press the test switch for 3 seconds to turn o ffthe current emergency state.

LED indicator

- Red stable: charging mode or charging full
- Red off: main power o ffor discharging mode

CAUTION:

- **DO NOT USE OUTDOORS**.
- DO NOT MOUNT NEAR GAS OR ELECTRONIC HEATERS.
- EQUIPMENT SHOULD BE MOUNTED IN LOCATIONS AND AT HEIGHTS WHERE IT WILL NOT BE SUBJECTED TO TAMPERING BY UNAUTHORIZED PERSONNEL.
- THE USE OF ACCESSORY EQUIPMENT NOT RECOMMENDED BY THE MANUFACTURER MAY CAUSE AN UNSAFE CONDITION.
- DO NOT USE THIS EQUIPMENT FOR OTHER THAN ITS INTENDED USE.

- Use with grounded, UL Listed, damp location rated fixtures and case should be grounding.
- The equipment is intended for ordinary locations and for permanent installation into one or more Listed emergency luminaires.

LED emergency driver
YH28,YH28A

Installation instruction:

- Please install this product properly by the licensed electrician.
- Surface mounting and suspending mounting are available.
- It is only used for <300W lighting fixtures.
- Please check and confirm all the data and usage surrounding before installation.
- Damp or wet location installation is OK.
- This item could be used in the sealed fixtures or installed open area of the fixtures.
- Please keep it away from the flammable materials with a place of good heat dissipation.
- Please charge the battery consistently for >24 hours for the first time usage so as to activate the whole battery cells of discharging/charging duration.

Wiring diagram

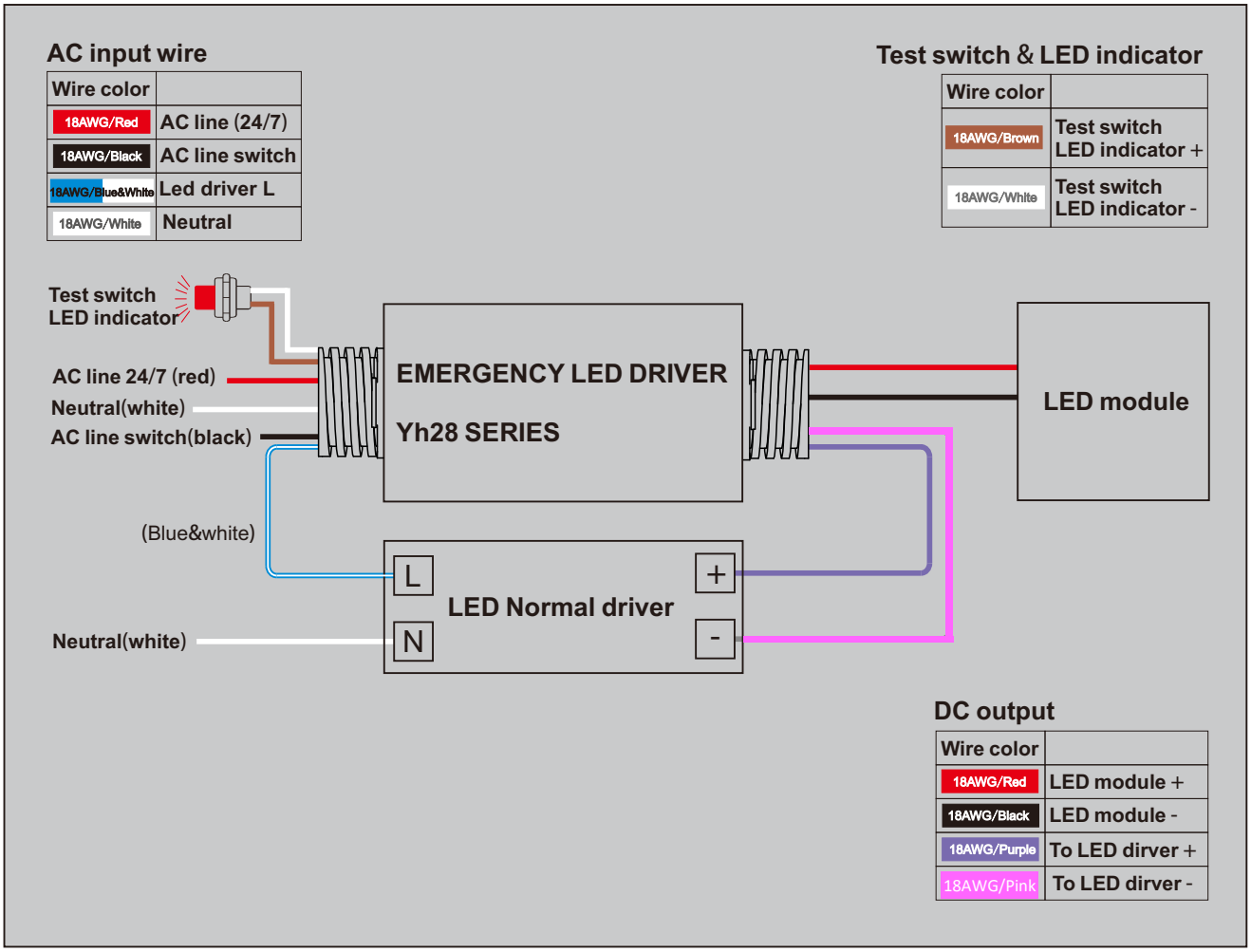

Maintenance:

- Please turn o ffthe main power every 3 months, so as to let the battery operate a charging/discharging circle. This will help make battery sustain a longer lifetime.
- Please check the emergency function with the push test button.
- Battery capacity is >60% when factory deliver goods, so it could be consistently stocked for Max 12 months.

Notes:

Users are not suggested replacing the batteries by themselves. If needed, please use the nominated batteries pack by the manufacturer and contact with us for the instructions of maintenance.

Warranty

- Warranty 5 years.
- Except for the following circumstances:
  1) Improper installation or operation.
  2) Misuse.
  3) Abuse.
  4) Unauthorized or improper repair alteration.
  5) Accident or negligence in use, storage, transportation.
  6) Any natural acts.