SLS

Linear Stairwell Luminaire

MODEL NO.	TYPE	PROJECT/DATE

KEY FEATURES

- Available in two lengths and apertures
- Three selectable color temperature
- Three selectable wattage levels

TECHNICAL SUMMARY

SIZE	2', 4'
WATTAGE	2': 25W/20W/15W 4': 50W/40W/30W
LUMEN/EFFICACY	2': (2000/2700/3300LM); 135 LM/W 4': (4100/5400/6600LM); 135 LM/W
INPUT VOLTAGE	120 - 277Vac
AVAILABLE CCT/CRI	30K/35K/40K Color Changeable; CRI>80
CONTROL	0-10V, Bi-level Ultrasonic Motion Sensor
VALIDATION	UL & cUL Damp Location, ADA, FCC, RoHS
LIFETIME/WARRANTY	5 YR Warranty / L70>50,000 HRS
OPERATION TEMP	-4°F ~ 104°F
FINISH	Matte White

**Delivered lumen may vary, refer to photometric for full performance data*

DIMENSIONS

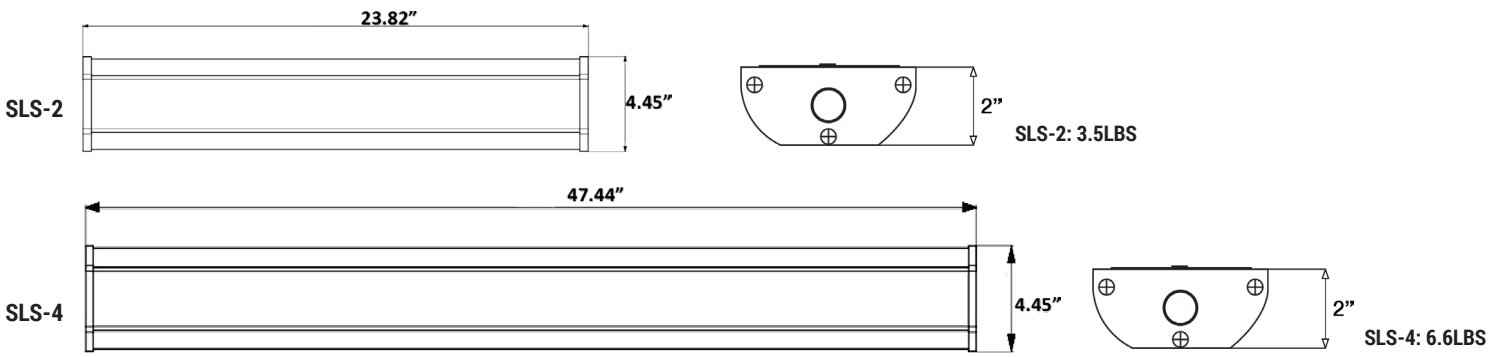

SLS

Linear Stairwell Luminaire

MODEL NO.	TYPE	PROJECT/DATE

ORDERING INFORMATION

*Additional cost and/or lead time on customized fixtures may apply. ** EM0 is 4W for SLS-2FT; EM1 is 8W for SLS-4ft

Series	Size	Lumen Package	Input Voltage	CCT	Control	Finish	EM Options*
SLS	**2** - (2')	**33LC -** (2000/2700/3300LM)	**U -** (120-277Vac)	**CC -** (35/40/50K Color Changeable)	**C10 -** (0-10V 10% Dimming) **CMU -** (0-10V Bi-Level Ultrasonic Sensor)*	**WH -** (Matte White)	**EM0 -** (4W Factory Installed Integrated EM) **EM1 -** (8W Factory Installed Integrated EM)**
	4 - (4')	**66LC -** (4100/5400/6600LM)					

AVAILABLE ACCESSORIES

Accessories
PSC-BL-U-FM-DC0 - Dimming Ultrasonic Sensor

PSC-BL-U-FM-DC0
DIMMING ULTRASONIC SENSOR

SPECIFICATIONS

CONSTRUCTION
Die-formed 22 gauge cold-rolled steel backplate with extruded aluminum housing. Luminare is ADA compliant.

FINISH
Powder coated in a white finish.

OPTICS
High-diffused acrylic lens reducing glare and provide smooth distribution over the appointed area.

ELECTRICAL
Constant current class 2 120-277Vac input, 50/60Hz driver with 0-10V dimming and DC12V output for sensor. Lumen maintenance is L70>50,000.

VALIDATIONS
UL & cUL certified. 5 year warranty. RoHS. FCC.

MOUNTING
Surface mounting. Ceiling Mount.