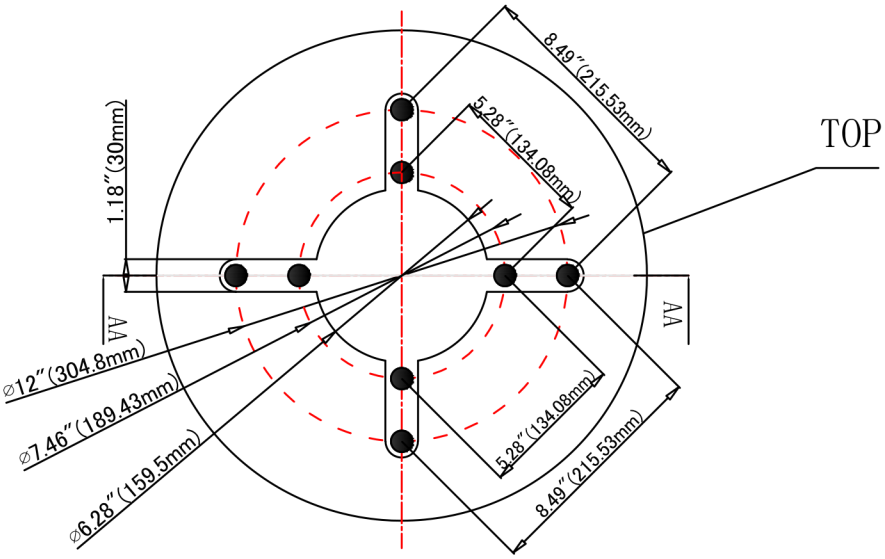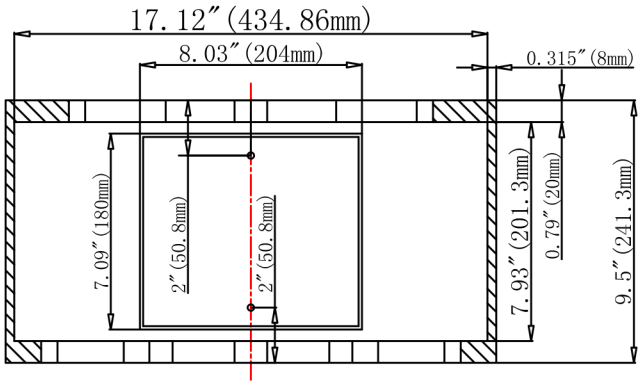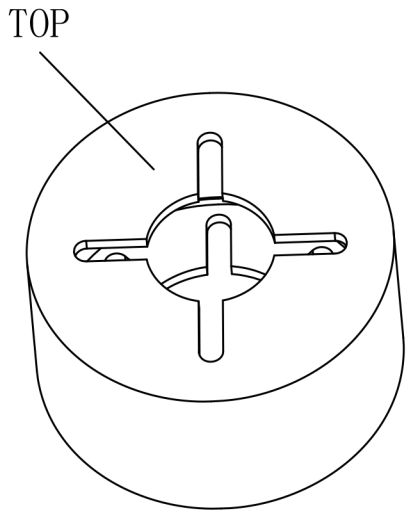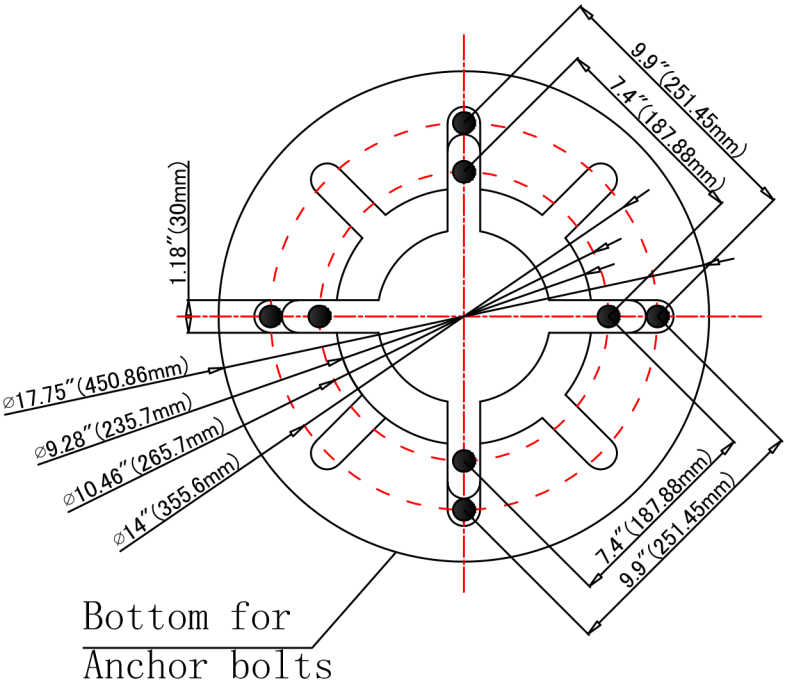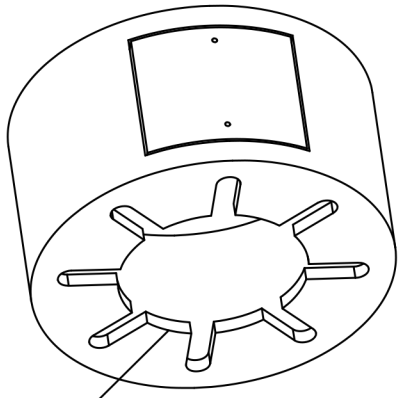Spitzer LIGHTING